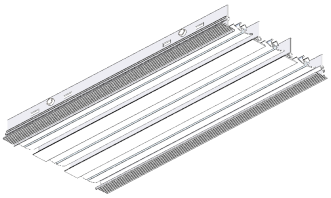

CONCEALED DESIGN SLOT DIFFUSERS

OVERVIEW

LSD SERIES

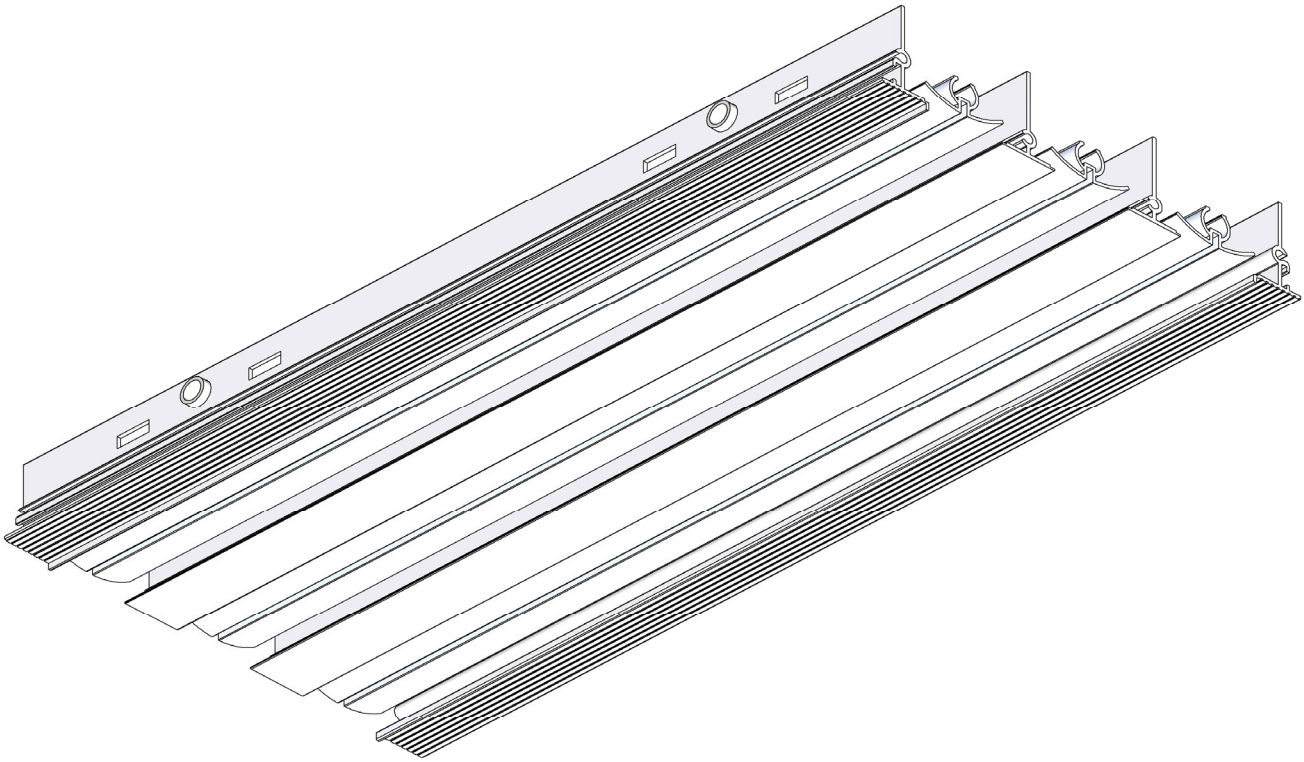

OVERVIEW:
The **LSD** series linear diffusers allow the management of high air flow rates with minimum values of pressure drop and sound power generated, guaranteeing excellent comfort conditions, absence of sensible currents and temperature uniformity even in large rooms. They also have a double deflector regulation system, two horizontal throw modes, the first exploits the Coandă effect, the second allows high flow rates to be diffused.

CHARACTERISTICS AND FUNCTIONING:
The **LSD** series diffusers consist of a body and a series of aluminium blades, the latter adjustable without removing the diffuser.

APPLICATIONS:
The **LSD** series diffusers are used in ventilation systems for rooms with ceiling heights of 3 to 6 metres, such as open-plan offices, shopping malls, hospital wards and hotel rooms.

DIFFUSER INSTALLATION:
The **LSD** series diffusers can be mounted directly on the ceiling or on special plenum by means of suspension bridges. It is possible to realise continuous lines.

FINISH:
The **LSD** series loudspeakers are made with:
Frame: anodised aluminium, white RAL 9010 glossy, black RAL 9005 matte.
Deflectors: anodised aluminium, white RAL 9010 glossy, white RAL 9003 matte, black RAL 9005 matte.
Special finishes of the diffuser body can be realised on request.

UNSUITABLE ENVIRONMENTS:
Aluminium products are not suitable for installation in environments with an atmosphere containing corrosive substances for this material and in particular containing chlorine, such as swimming pools, spas and certain types of food industries.

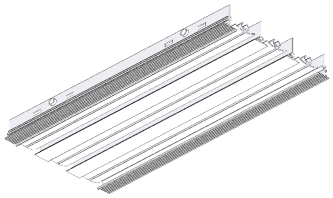

CONCEALED DESIGN SLOT DIFFUSERS

OVERVIEW

LSD SERIES

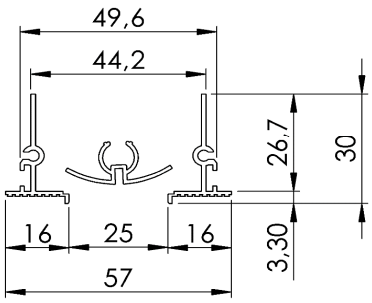

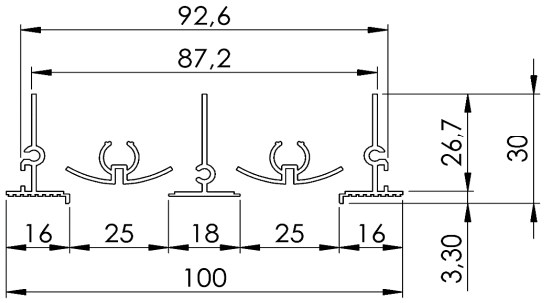

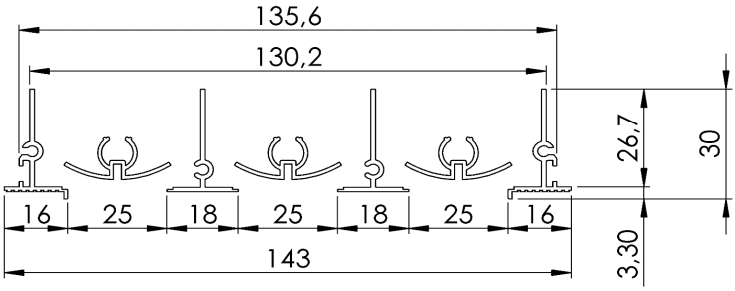

Effective section Ak [m^2]

	Length [mm]			
	500		1000	
n° of slots	high Coanda effect	high air flow	high Coanda effect	high air flow
1	0,0047	0,0077	0,0094	0,0154
2	0,0094	0,0154	0,0189	0,0309
3	0,0142	0,0232	0,0283	0,0463

	Length [mm]			
	1500		2000	
n° of slots	high Coanda effect	high air flow	high Coanda effect	high air flow
1	0,0142	0,0232	0,0189	0,0309
2	0,0283	0,0463	0,0378	0,0618
3	0,0425	0,0695	0,0566	0,0926

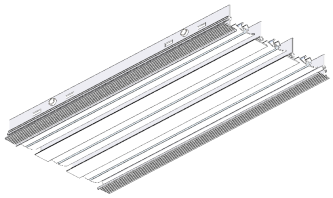

CONCEALED DESIGN SLOT DIFFUSERS

OVERVIEW

LSD SERIES

Adjustment for horizontal throw
high Coandă effect
The throw flows along the ceiling
guarantees the absence of sensitive air currents
used in both cooling and heating

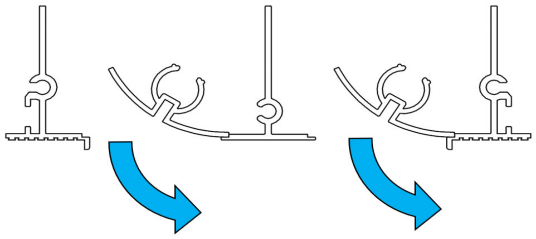

Adjustment for vertical throw
The launch penetrates directly into the room
prevents the layering effect
used in heating

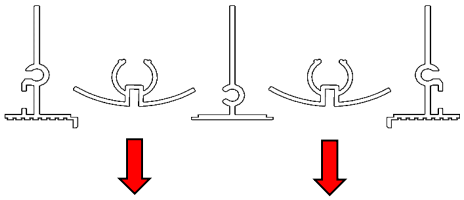

Adjustment for horizontal throw
high air flow
The throw flows along the ceiling
guarantees the ability to deliver high flow rates
with minimum pressure drop and sound power levels

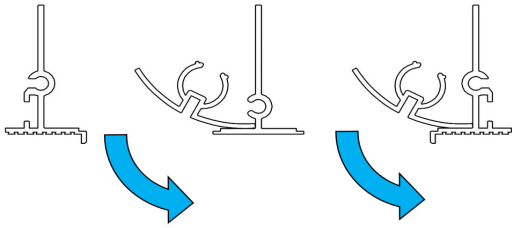

CHOICE OF LAUNCH ORIENTATION :
The horizontal throw is the most common use of this type of diffuser, both in heating and cooling. The throw adheres to the ceiling and spreads horizontally within the room. This generates a vertical recall effect of the air already present in the room, guaranteeing perfect mixing without the presence of currents within the occupied zone. The vertical throw, used in heating, allows the warm air to be sent directly into the occupied zone, counteracting the tendency of warmer air to stratify, due to lower density, in the upper parts of the room.
The orientation of the throw is changed by rotating the deflector fin from inclined to horizontal and vice versa. The blade is rotated by acting from the outside of the diffuser using a lever at either end of each slot.

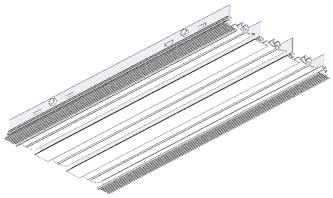

CONCEALED DESIGN SLOT DIFFUSERS

STANDARD PLENUM FOR LSD

LSD SERIES

1 slot

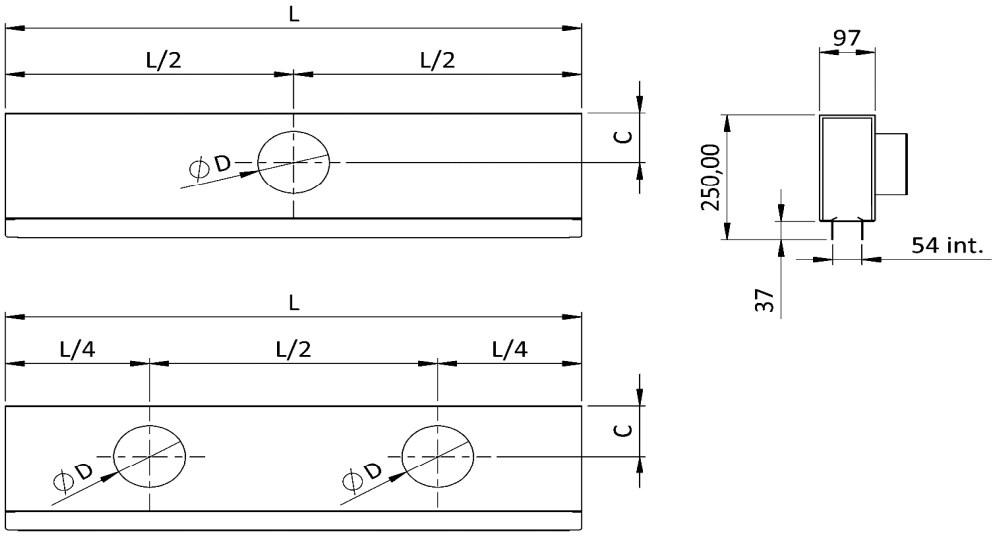

2-3 slots

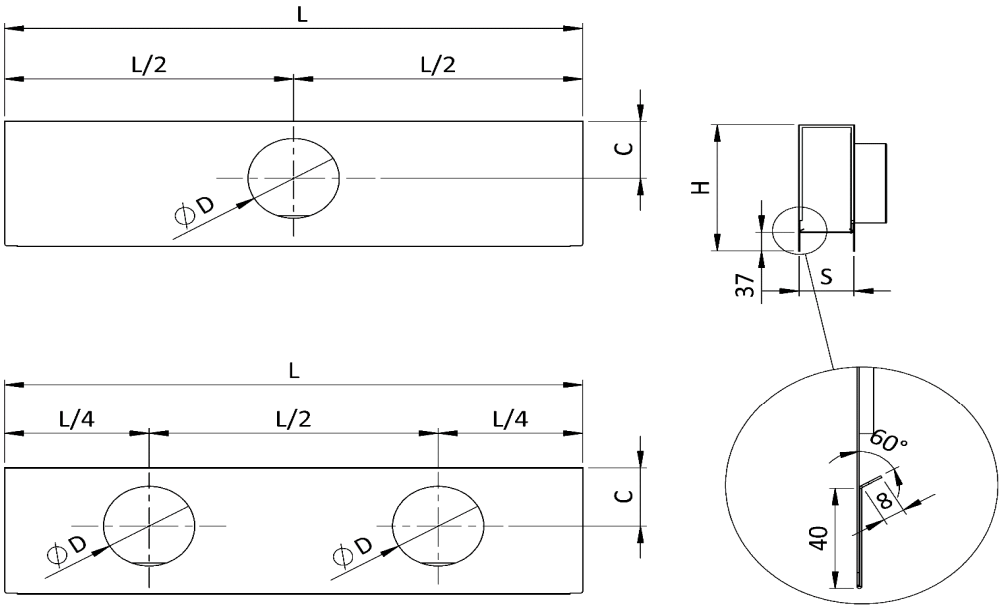

L Nominal diffuser length

				L ≤ 1200 mm		1201≤ L ≤ 2000 mm		Holes in the counter ceiling
slots	H (mm)	S (mm)	C (mm)	connector qty	ØD (mm)	connector qty	ØD (mm)	
1	250	54	100	1	124	2	124	L+10 x 59
2	250	95	115	1	158	2	158	L+10 x 102
3	320	138	135	1	198	2	198	L+10 x 145

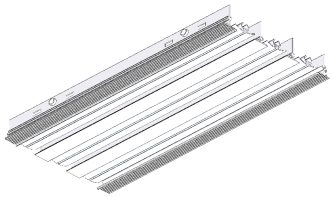

CONCEALED DESIGN SLOT DIFFUSERS

DIFFUSER INSTALLATION WITHOUT PLENUM

LSD SERIES

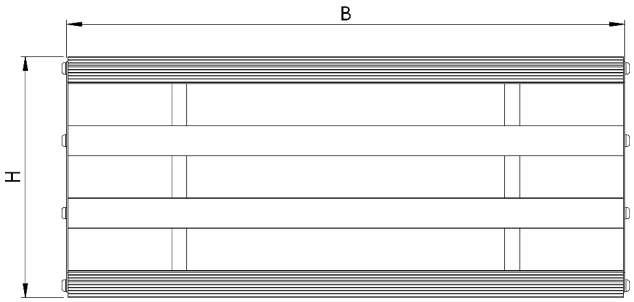

dimensions of the hole in the ceiling
B+10 X H+2

1

Remove the first deflector by turning and pushing it

2

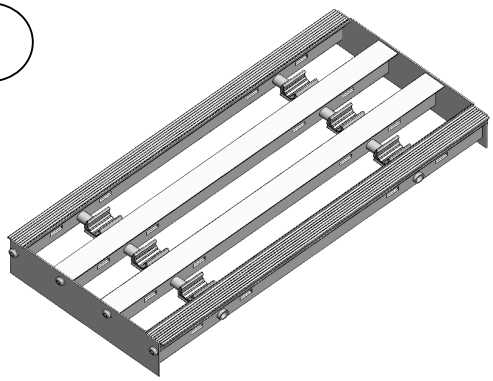

Remove all deflectors

3

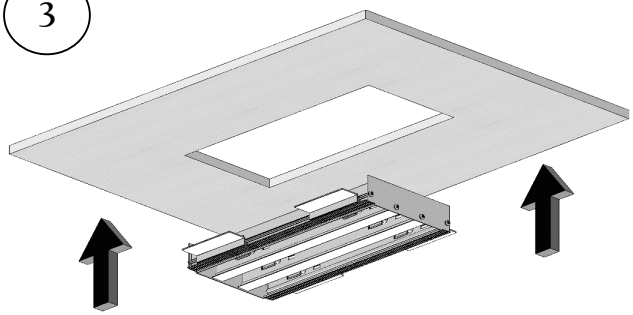

Insert the diffuser into the hole in the ceiling

4

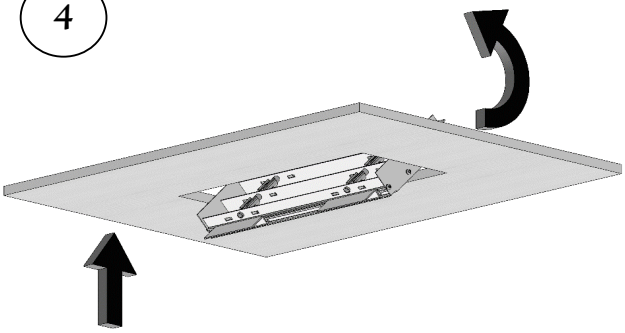

Rotate the diffuser to facilitate entry

5

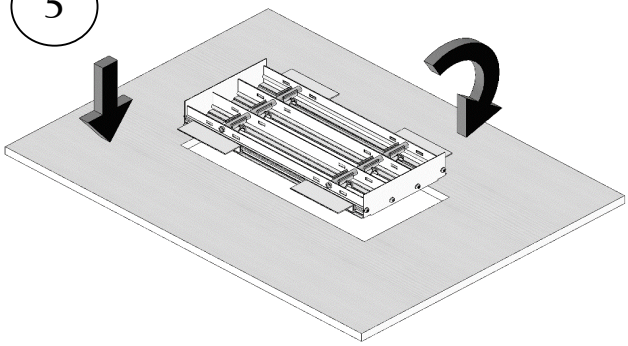

Place the diffuser inside the hole

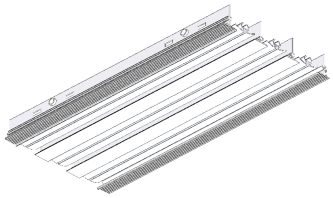

CONCEALED DESIGN SLOT DIFFUSERS

DIFFUSER INSTALLATION WITHOUT PLENUM

LSD SERIES

6

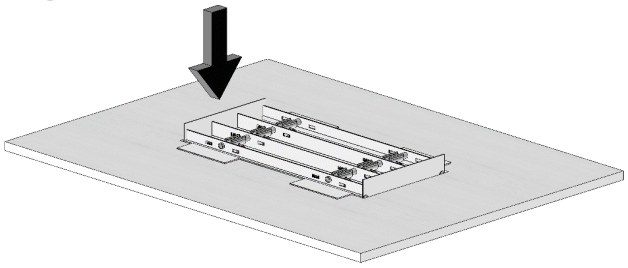

Attach the anchoring bayonets to the suspended ceiling

7

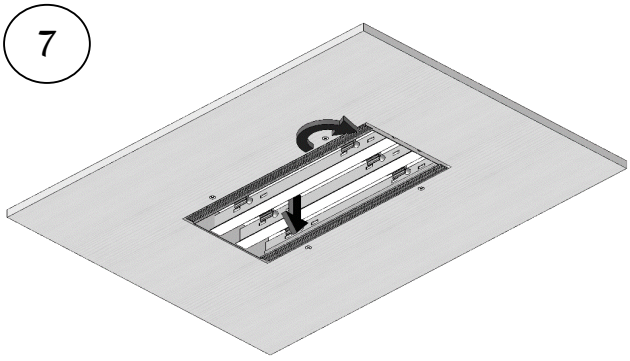

Keeping the diffuser in contact with the counter ceiling insert a self-drilling screw from bottom to top at each bayonet

8

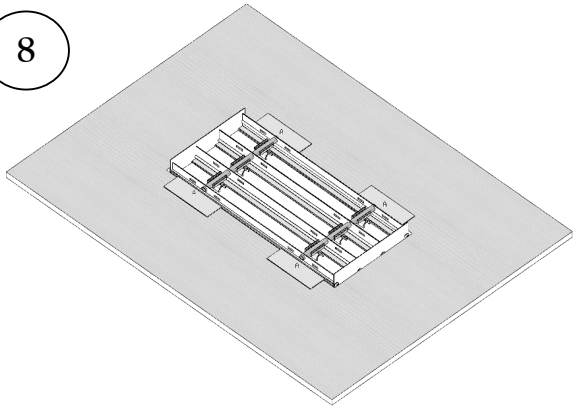

9

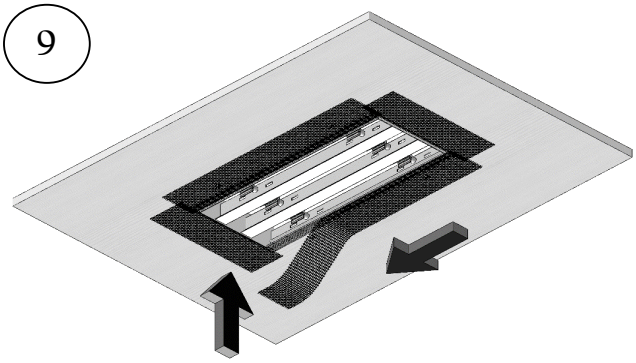

Apply plasterboard joint-covering tape

10

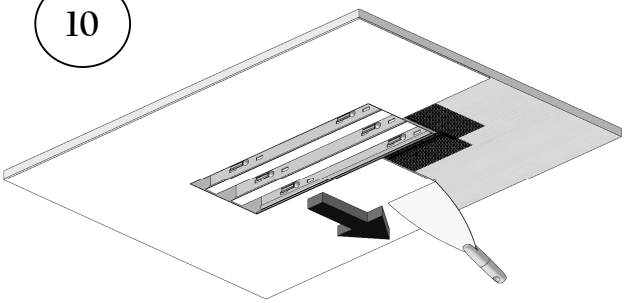

Apply skimming filler

11

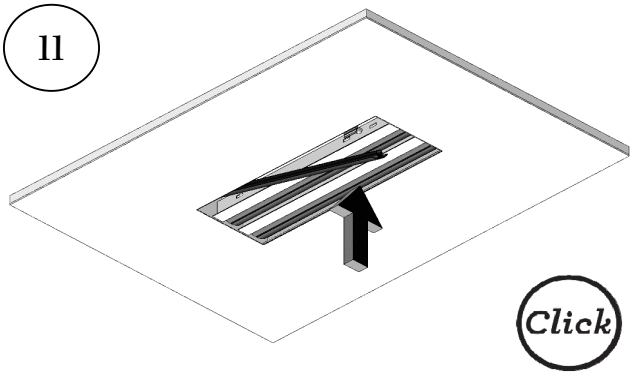

Refit the deflectors by attaching them to the appropriate

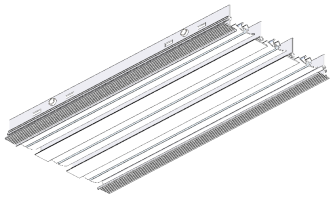

CONCEALED DESIGN SLOT DIFFUSERS

DIFFUSER INSTALLATION WITH PLENUM AND QUICK FIXES

LSD SERIES

1

Remove the first deflector by turning and pushing it

2

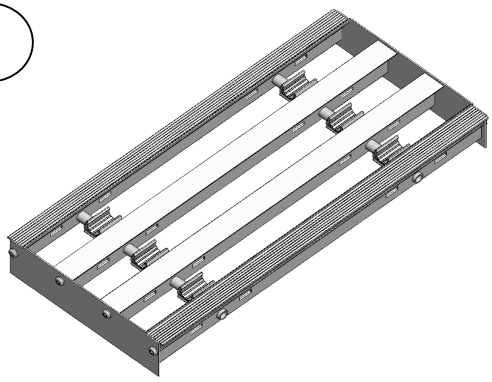

Remove all deflectors

3

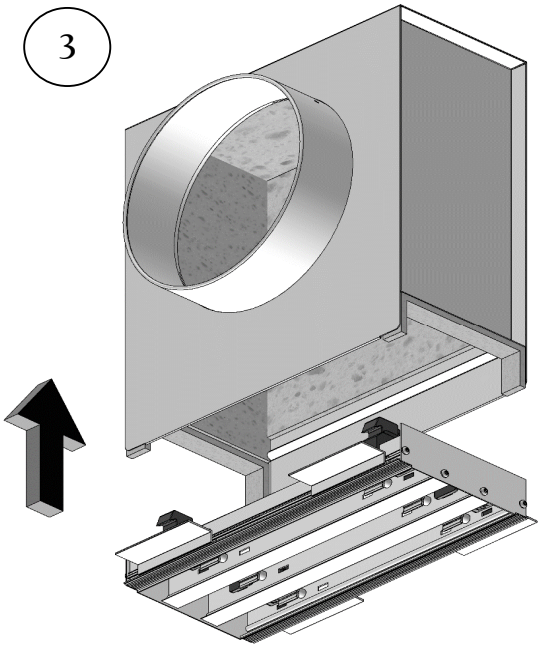

Insert the diffuser inside the plenum

4

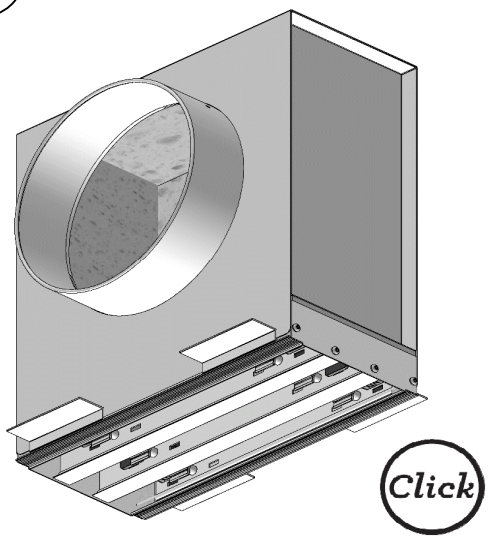

Attach the quick fixes to the plenum

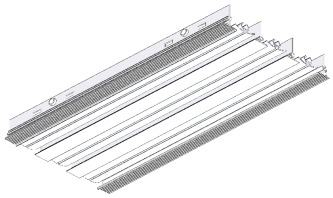

CONCEALED DESIGN
SLOT DIFFUSERS

LSD
SERIES

DIFFUSER INSTALLATION
WITH PLENUM AND QUICK FIXES

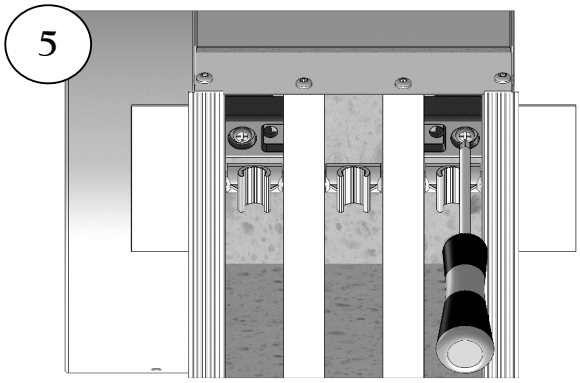

Insert a screwdriver

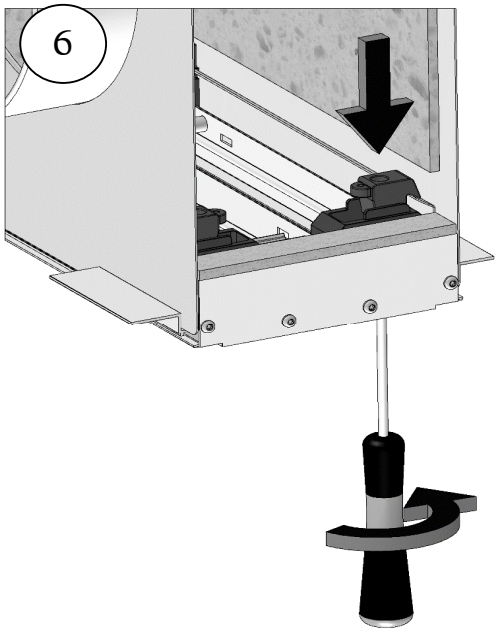

Tighten the screws of the quick fixes

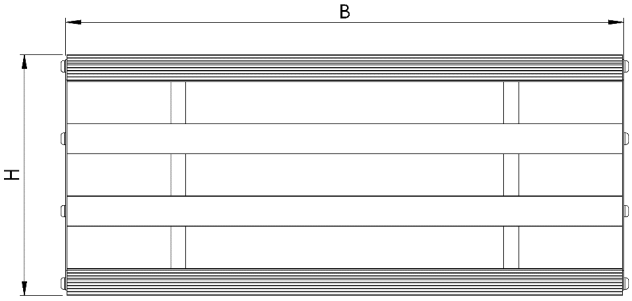

dimensions of the hole in the ceiling
B+10 X H+2

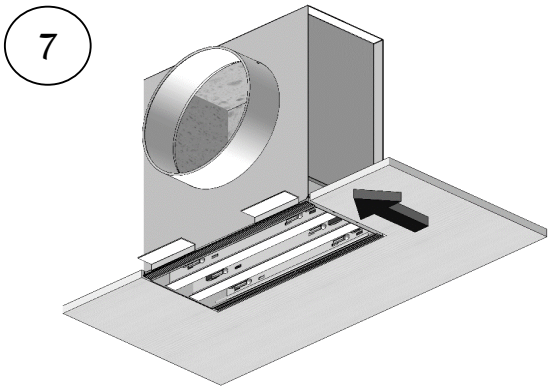

Add the first piece of plasterboard

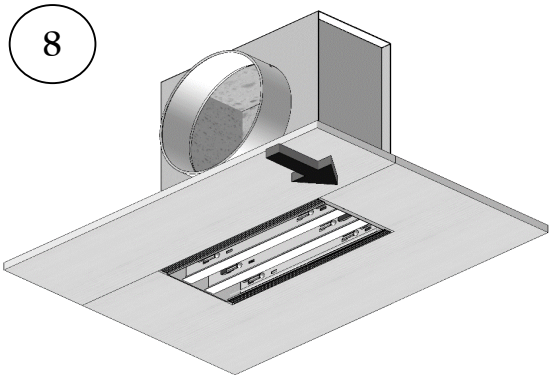

Add the second piece of plasterboard

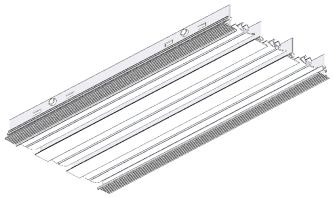

CONCEALED DESIGN SLOT DIFFUSERS

DIFFUSER INSTALLATION WITH PLENUM AND QUICK FIXES

LSD SERIES

9

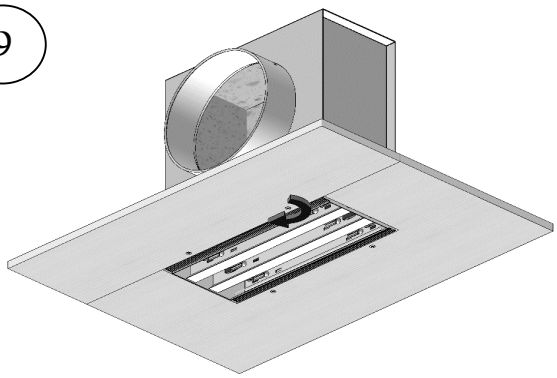

Tighten one screw per bayonet

10

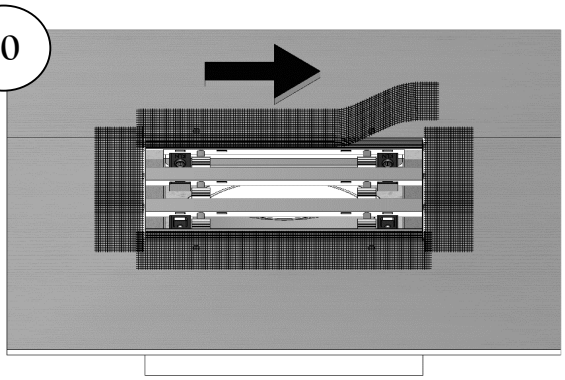

Apply plasterboard joint-covering tape

11

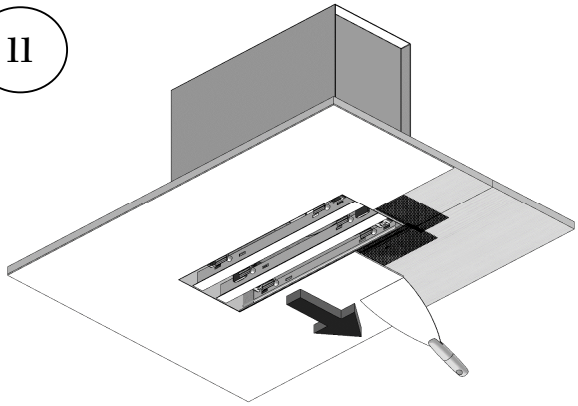

Apply skimming filler

12

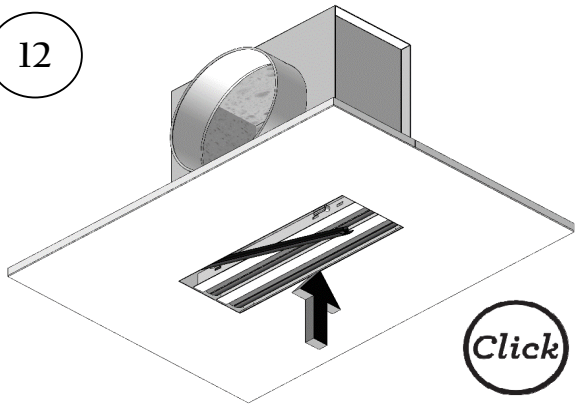

Reinstall the deflectors by attaching them to the appropriate clips

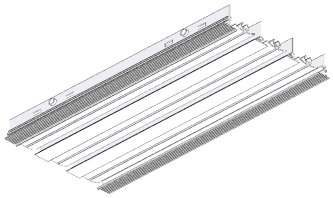

CONCEALED DESIGN SLOT DIFFUSERS

LSD SERIES

DIFFUSER INSTALLATION WITH PLENUM WITHOUT QUICK FIXES

1

Remove the first deflector by turning and pushing it

2

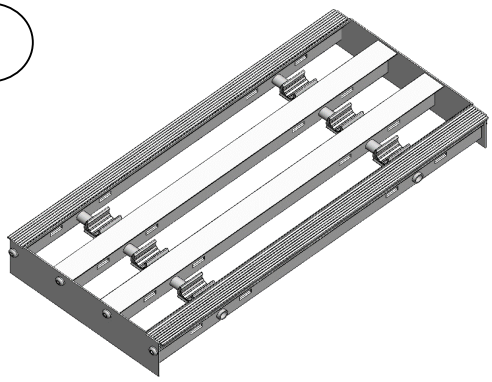

Remove all deflectors

3

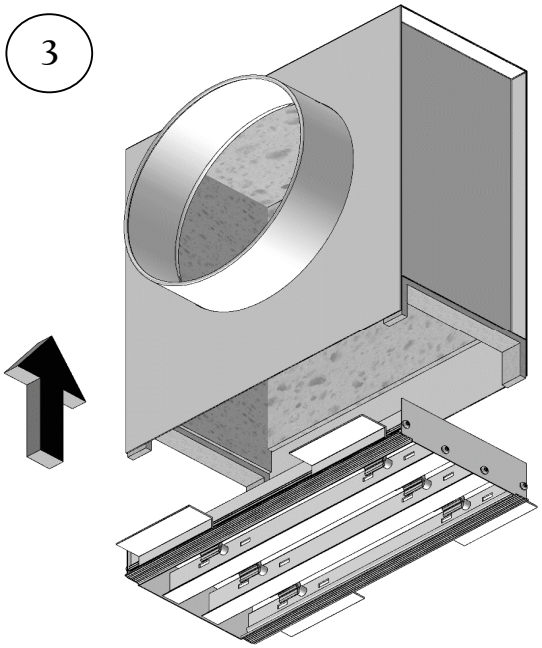

Insert the diffuser inside the plenum

4

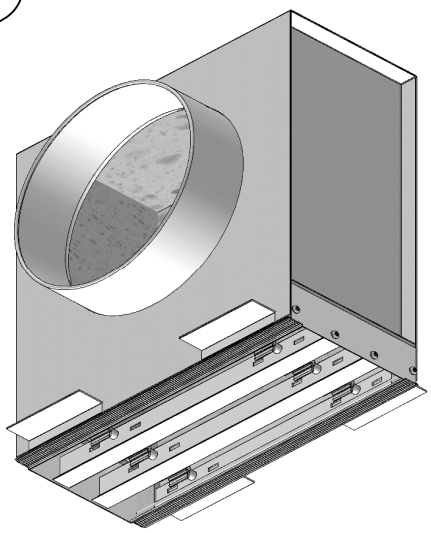

Bring the plenum to a stop on the anchorage bayonets

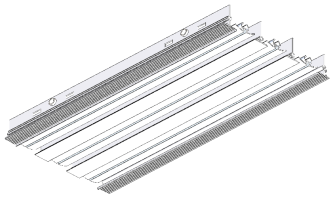

CONCEALED DESIGN
SLOT DIFFUSERS

LSD
SERIES

DIFFUSER INSTALLATION
WITH PLENUM WITHOUT QUICK FIXES

5

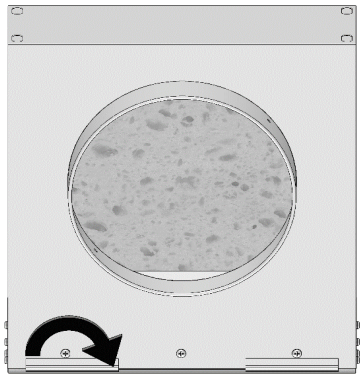

6

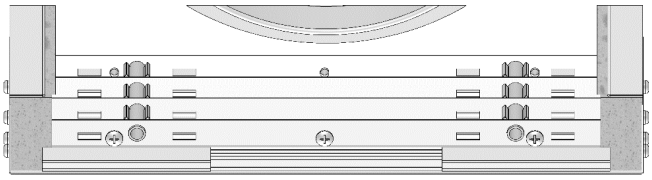

Fasten the plenum and diffuser frame with self-drilling screws When fixing with screws, take care not to damage the diffuser

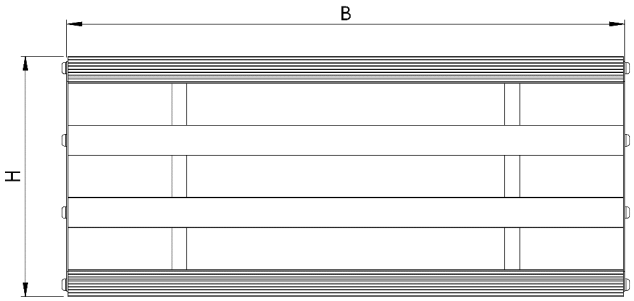

dimensions of the hole in the ceiling
B+10 X H+2

7

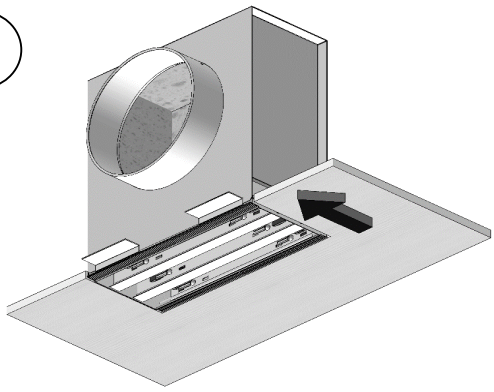

Add the first piece of plasterboard

8

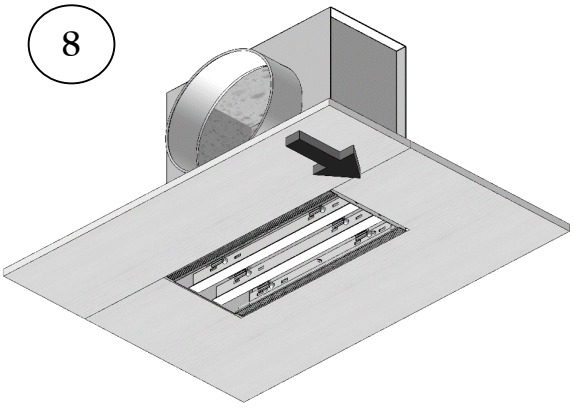

Add the second piece of plasterboard

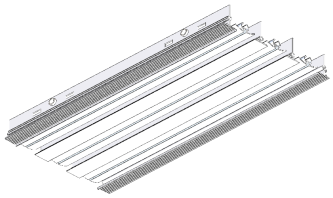

CONCEALED DESIGN
SLOT DIFFUSERS

LSD
SERIES

DIFFUSER INSTALLATION
WITH PLENUM WITHOUT QUICK FIXES

9

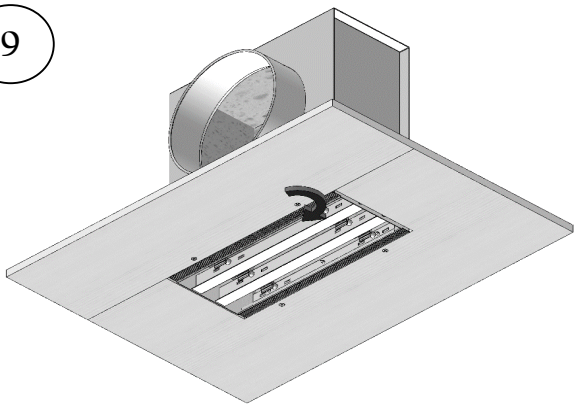

Tighten one screw per bayonet

10

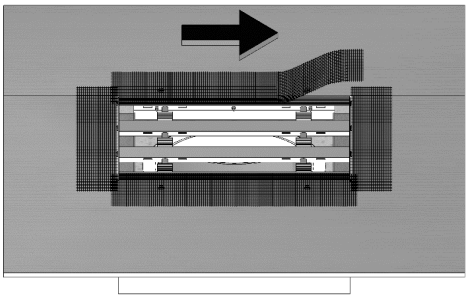

Apply plasterboard joint-covering tape

11

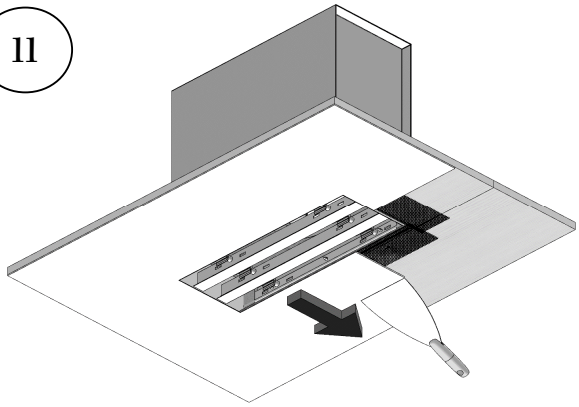

Apply skimming filler

12

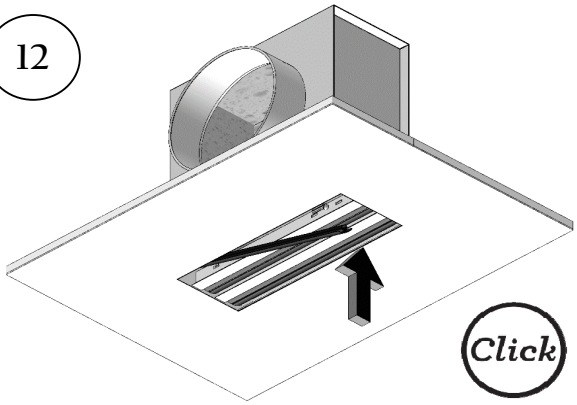

Reinstall the deflectors by attaching them to the appropriate clips

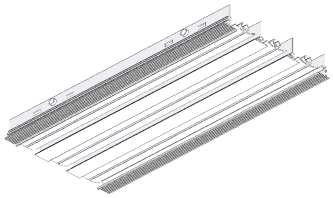

CONCEALED DESIGN SLOT DIFFUSERS

PERFORMANCE

LSD SERIES

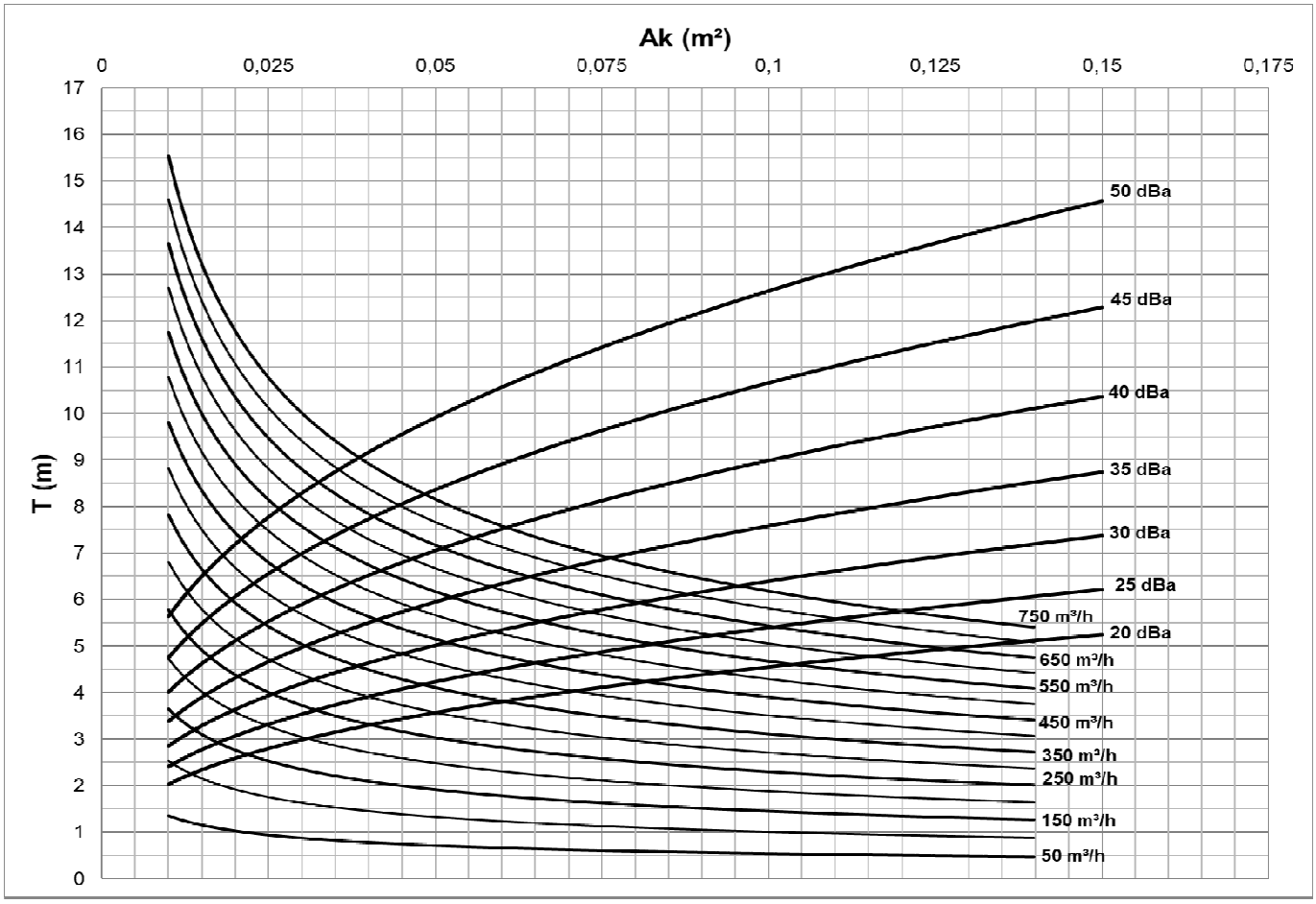

T= Launch with terminal velocity 0.2m/s

Effective section Ak [m²]

	Length [mm]			
	500		1000	
n° of slots	high Coanda effect	high air flow	high Coanda effect	high air flow
1	0,0047	0,0077	0,0094	0,0154
2	0,0094	0,0154	0,0189	0,0309
3	0,0142	0,0232	0,0283	0,0463

	Length [mm]			
	1500		2000	
n° of slots	high Coanda effect	high air flow	high Coanda effect	high air flow
1	0,0142	0,0232	0,0189	0,0309
2	0,0283	0,0463	0,0378	0,0618
3	0,0425	0,0695	0,0566	0,0926

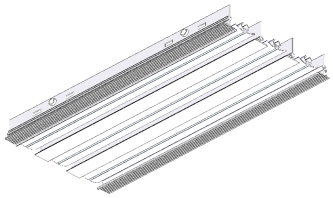

CONCEALED DESIGN SLOT DIFFUSERS

PERFORMANCE

LSD SERIES

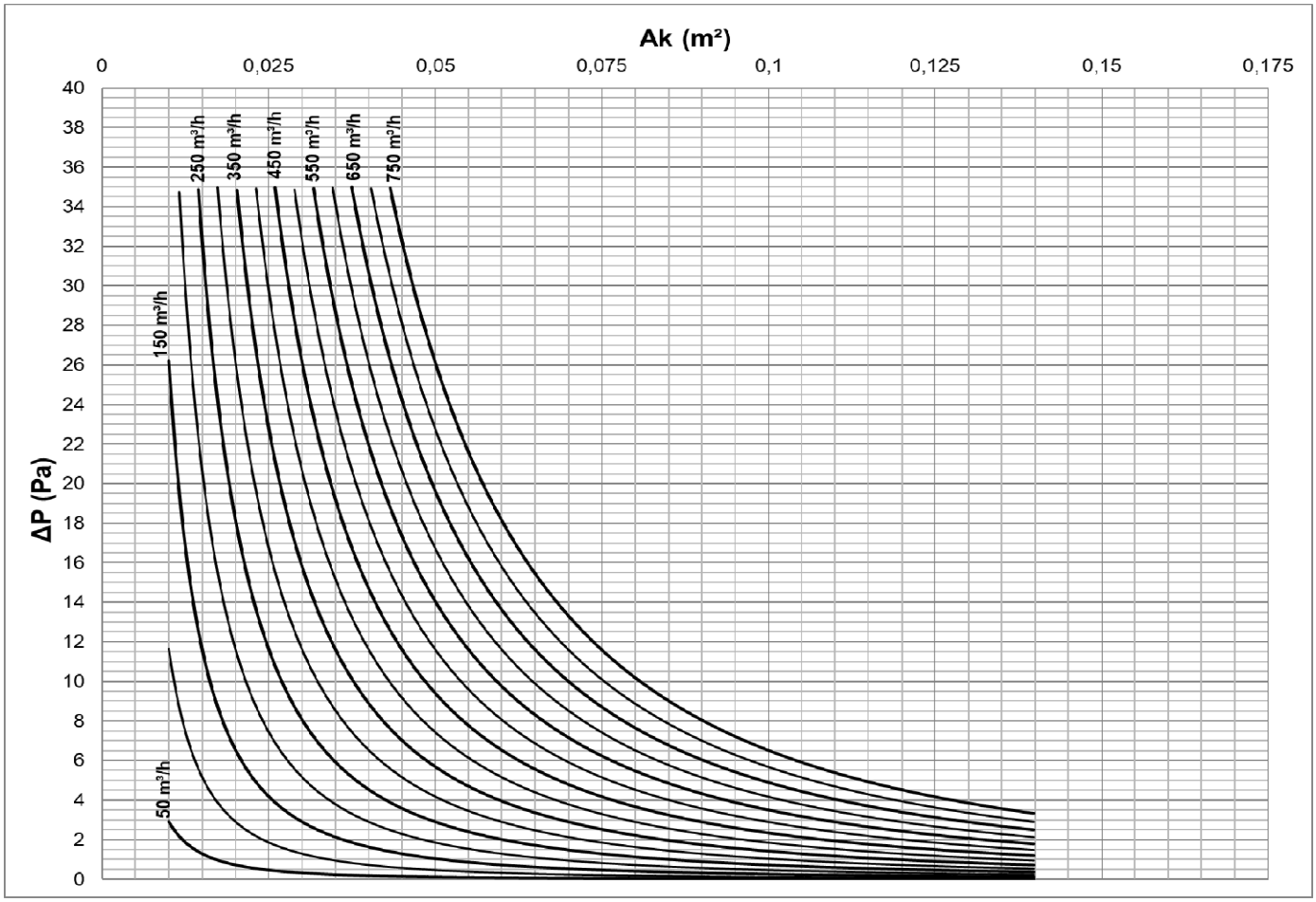

Effective section Ak [m²]

	Length [mm]			
	500		1000	
n° of slots	high Coanda effect	high air flow	high Coanda effect	high air flow
1	0,0047	0,0077	0,0094	0,0154
2	0,0094	0,0154	0,0189	0,0309
3	0,0142	0,0232	0,0283	0,0463

	Length [mm]			
	1500		2000	
n° of slots	high Coanda effect	high air flow	high Coanda effect	high air flow
1	0,0142	0,0232	0,0189	0,0309
2	0,0283	0,0463	0,0378	0,0618
3	0,0425	0,0695	0,0566	0,0926

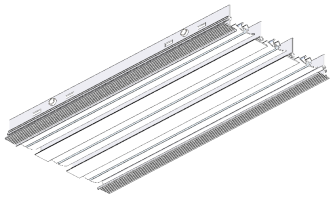

CONCEALED DESIGN SLOT DIFFUSERS

HOW TO ORDER

LSD SERIES

LSD25 **CONCEALED DESIGN SLOT DIFFUSER**

Number of slots[1] 1-2-3

Length [mm] (500/1000/1500/2000)

- A Frame color : anodised[2]
- B Frame color : RAL 9005 matte
- R Frame color : RAL 9010 glossy
- L Frame color : RAL 9003 matte[3]

- AA Deflector colour: anodizzato
- AB Deflector colour: RAL 9005 matte
- AR Deflector colour: RAL 9010 glossy
- AL Deflector colour: RAL 9003 matte
- ZZ Without deflector

- B With quick fixes[4]
- N Without quick fixes

LSD25 2 500 B AB B

1 Up to 6 slits on request
2 Raw aluminium side frames
3 Side frames in RAL 9010 glossy
4 Mandatory in case of diffuser with P94A Lindab plenum:

NUMBER OF PLANNED QUICK FIXES
Diffuser 1 slot
Length up to 1500mm: 2 quick-fixes
Length over 1500mm: 4 quick-fixes
Diffuser 2-3 slots
Length up to 1500mm: 4 quick-fixes
Length over 1500mm: 6 quick-fixes

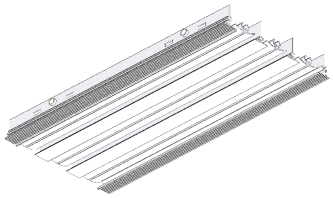

CONCEALED DESIGN SLOT DIFFUSERS

LSD SERIES

HOW TO ORDER PLENUM

P94A **Plenum box for LSD linear diffuser**

- I External insulation
- C Internal insulation
- N Not isolated

Number of slots[1] 1-2-3

Length

- N Connector in ABS without damper
- D Connector in ABS with damper
- M Connector in steel without damper
- F Connector in steel with damper

P94 N 2 500 N

1 Up to 6 slots on request

As standard, plenums are supplied unmounted on the diffuser

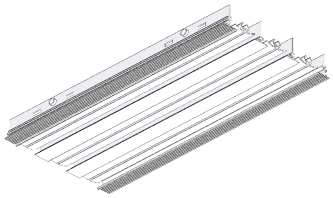

CONCEALED DESIGN SLOT DIFFUSERS

ACCESSORIES

LSD SERIES

Bayonet for fixing the deflector

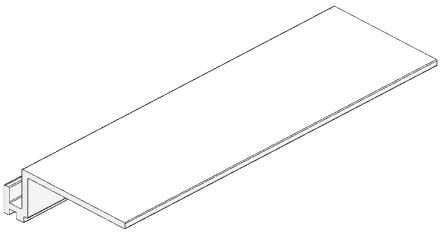

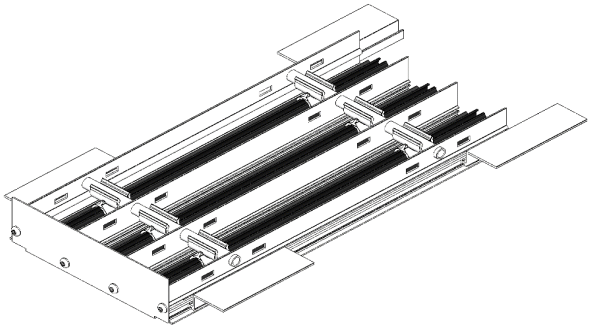

CD-G0-LSDTESTATA-3F
Standard aluminium header

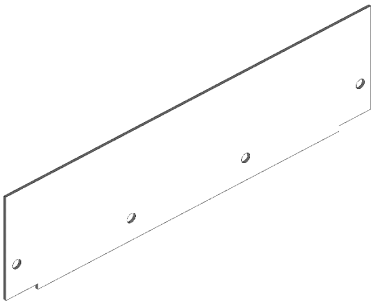

CD	G0	G0 Anodised V2 RAL 9010 glossy 9005 RAL 9005 matte
	LSDTESTATA	**Header for LSD**
	3	Number of slots[1] 1-2-3
	F	

1 Up to 6 slots, on request

KLN-QF2
Pair of Quick Fix hooks

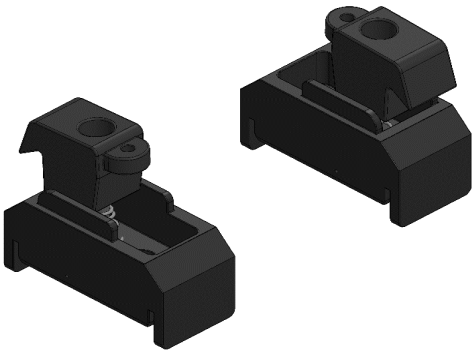

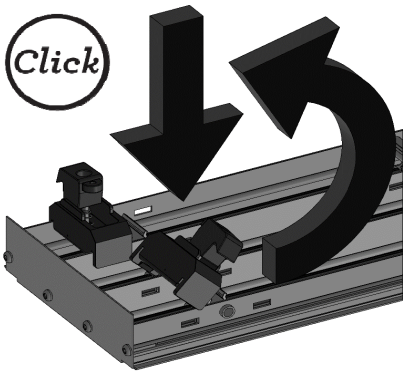

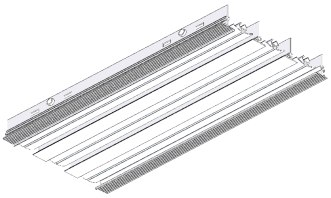

CONCEALED DESIGN SLOT DIFFUSERS

ACCESSORIES

LSD SERIES

LSDC **Corner connection**

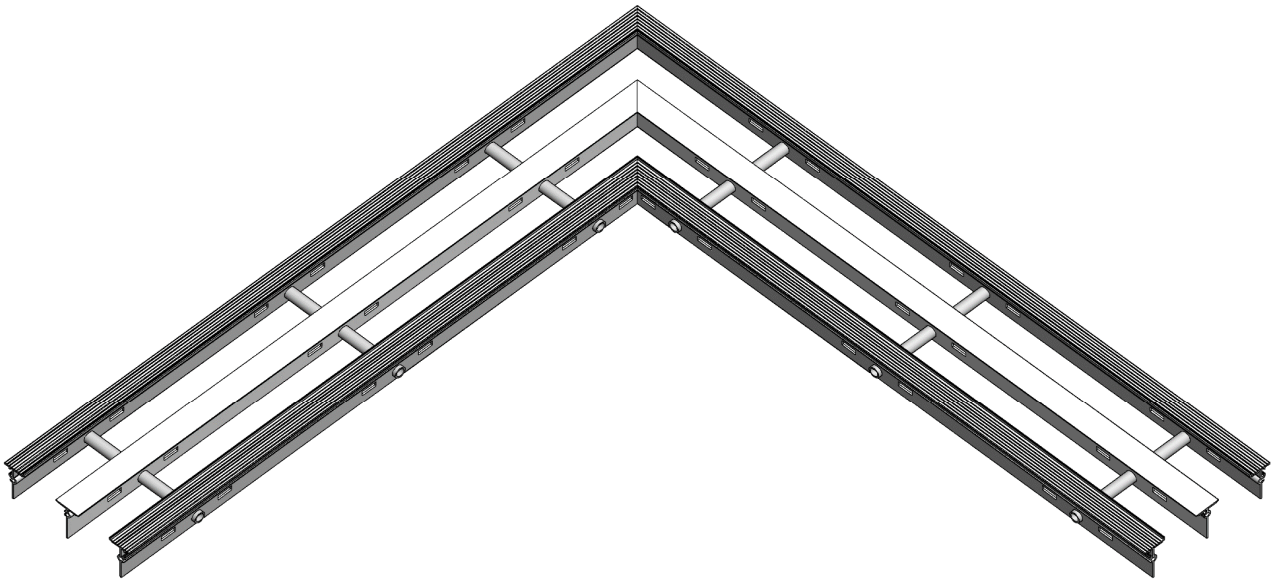

Corner connection for LSD

Number of slots[1] 1-2-3

A	Frame color : anodised[2]
B	Frame color : RAL 9005 matte
R	Frame color : RAL 9010 glossy
L	Frame color : RAL 9003 matte[3]

AA	Deflector color: anodizzato
AB	Deflector color: RAL 9005 matte
AR	Deflector color: RAL 9010 glossy
AL	Deflector color: RAL 9003 matte
ZZ	Without deflector

LSDC25 2 A AA

1 Up to 6 slots on request
2 Raw aluminium side frames
3 Side frames in RAL 9010 glossy

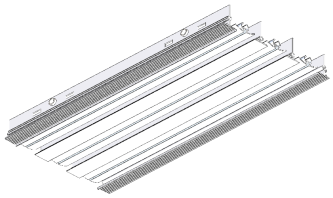

CONCEALED DESIGN SLOT DIFFUSERS

ACCESSORIES

LSD SERIES

LSDC **Corner connection**

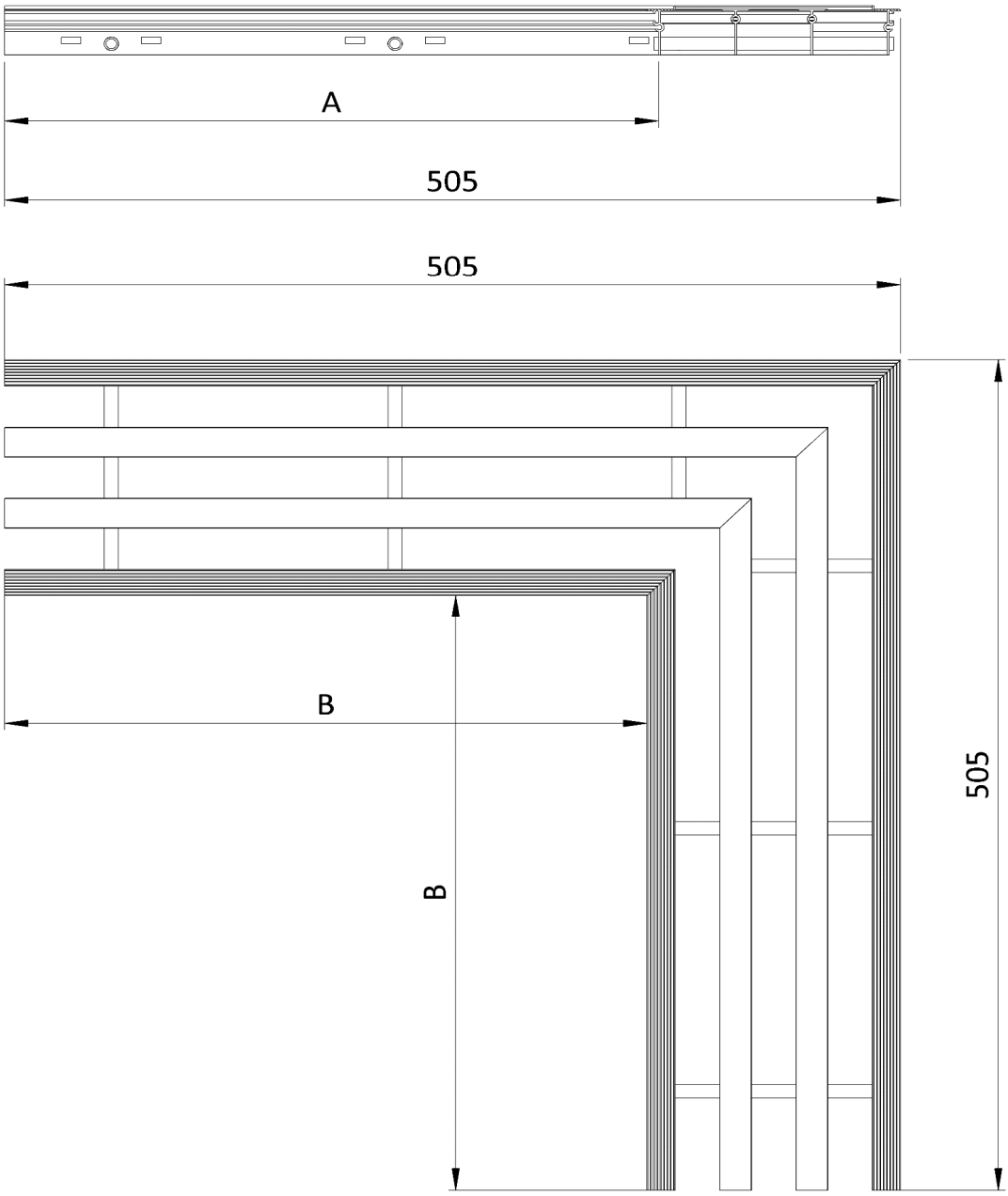

number of slots	A	B
	mm	mm
1	455	448
2	412	405
3	369	362

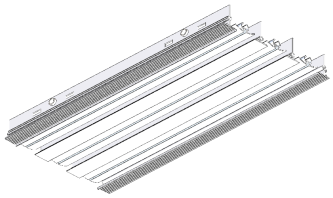

CONCEALED DESIGN SLOT DIFFUSERS

ACCESSORIES

LSD SERIES

Example of continuous line installation with corners

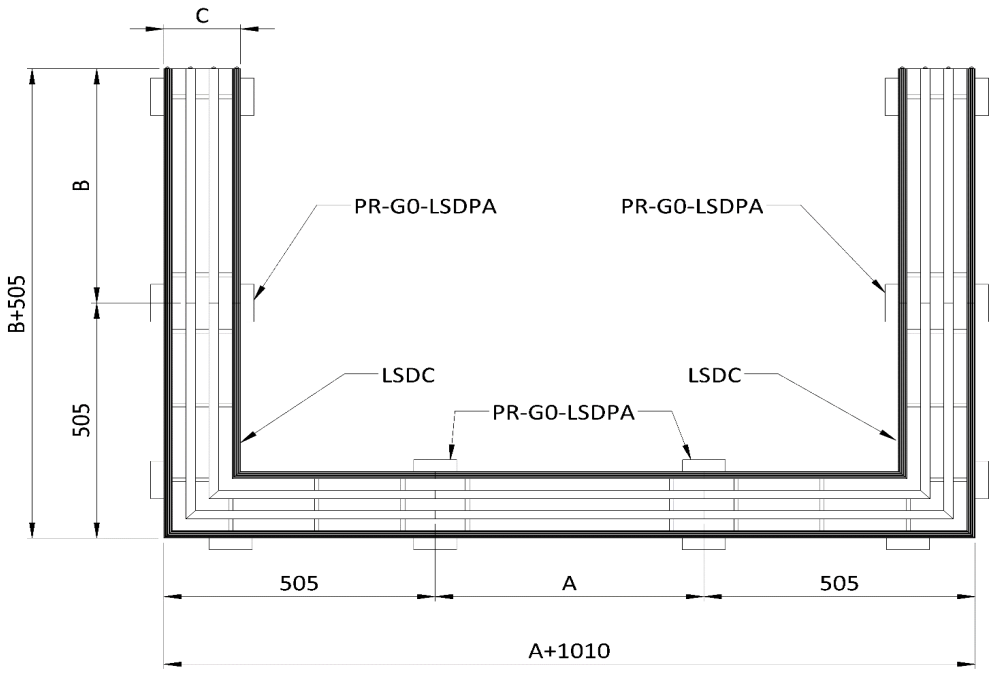

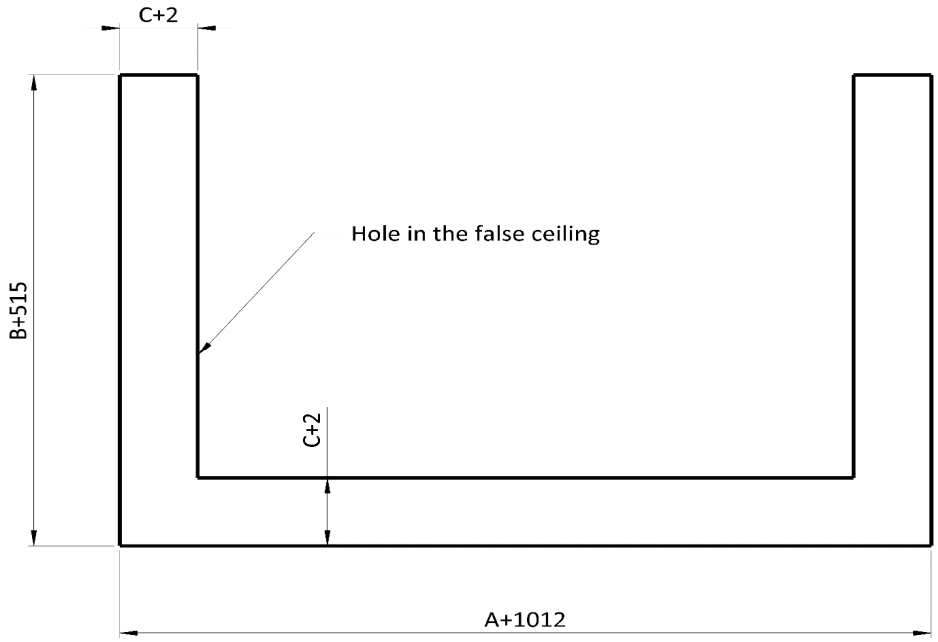

number of slots	C (mm)
1	57
2	100
3	143